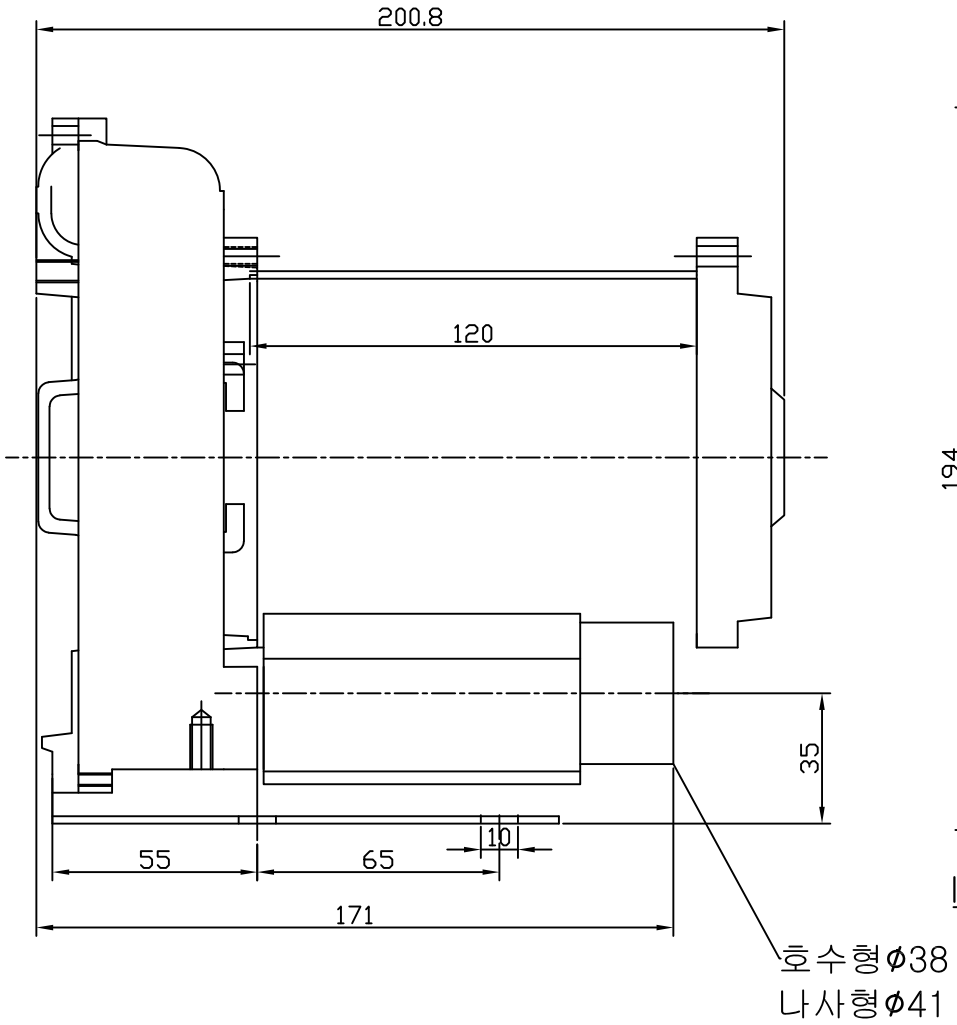

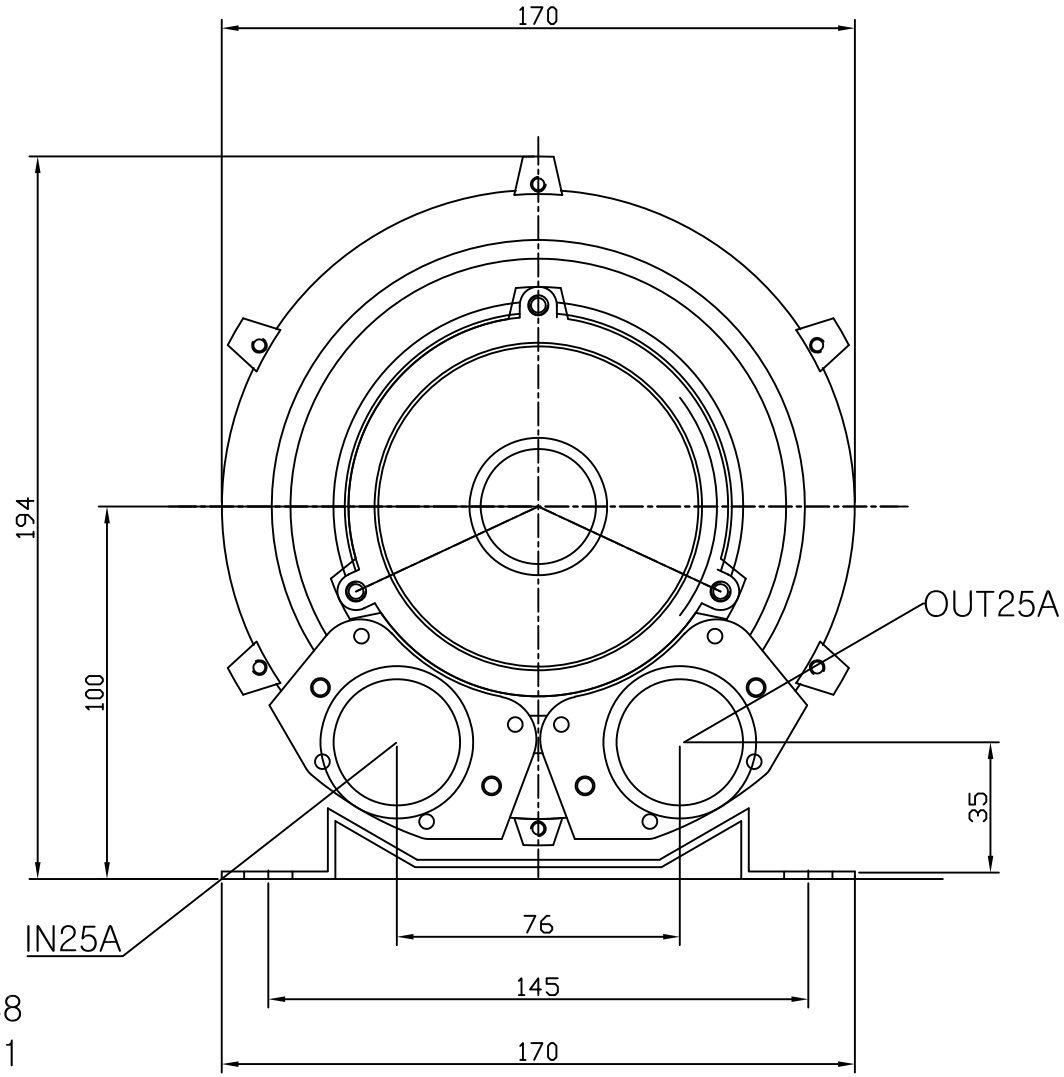

일반 형

DATE	MARK	REMARK	DSGN	CHK	APRD

TYPE
RING BLOWER(Reg.Blower)
IE-0010

DWG.NAME
OUTLINE DIMENSION

APPROVED	CHECK	DESIGN	DRAWN	THIRD ANGLE PROJECTION	SCALE	N/S	DATE 13.03.18
				REF. DWG. NO.	3φ0.1 KW2P		

inha CLOTECH 인하글로텍
TEL : 031-431-0321
FAX : 031-431-9740

DWG. NO. 00100001